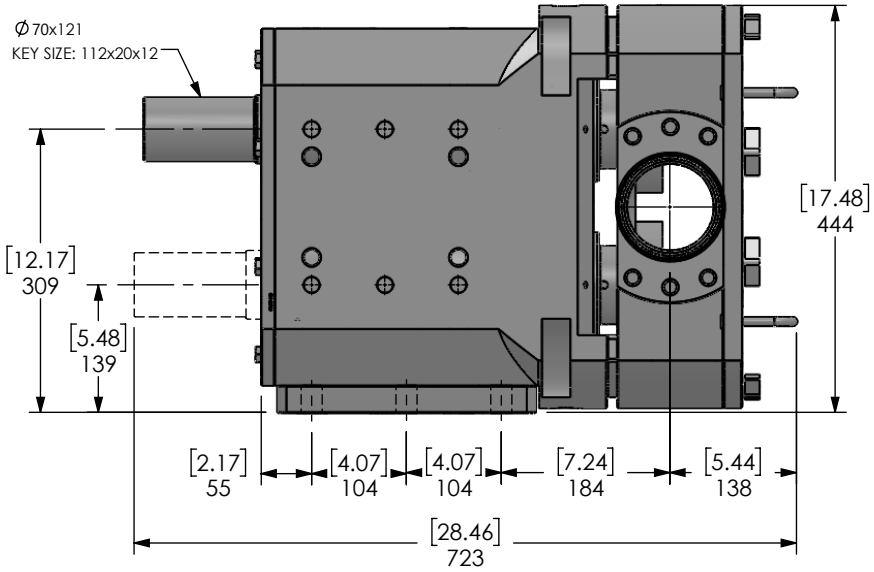

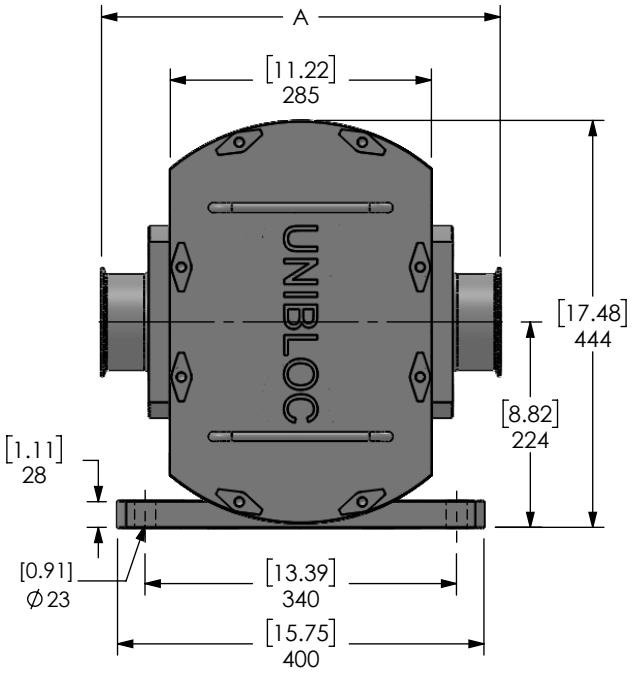

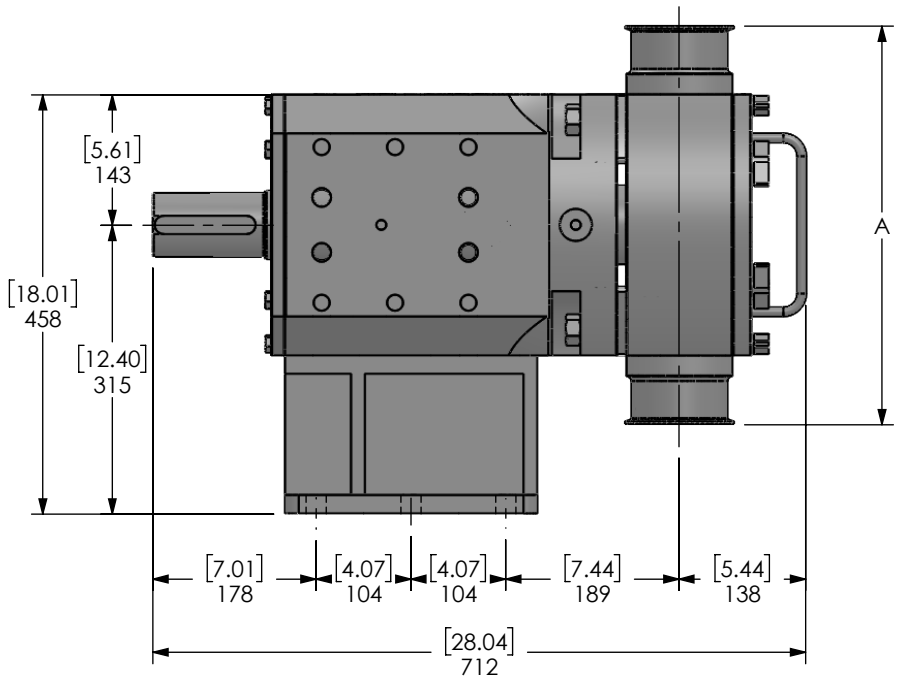

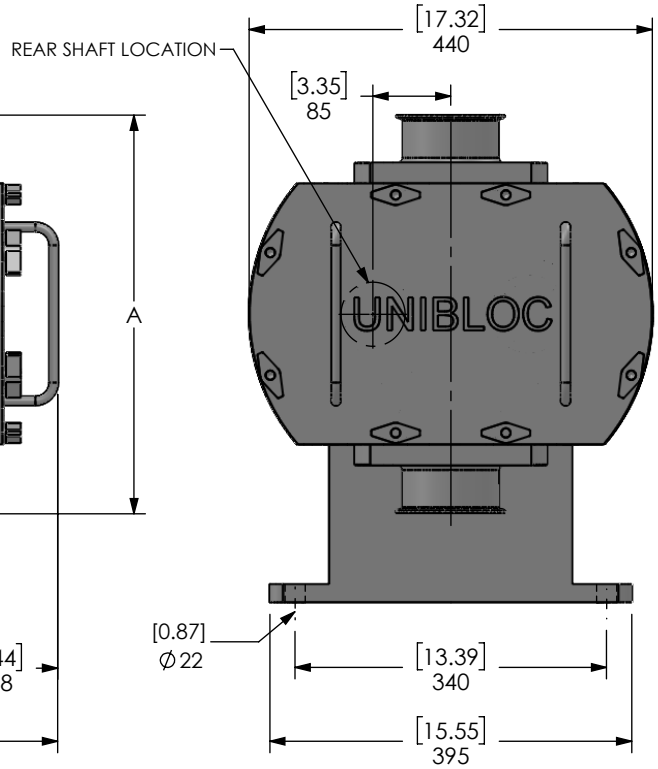

PORT TYPE	PORT SIZE	A	
		mm	in.
SANITARY TRICLAMP	4"	435	17.1
ACME	4"	435	17.1
DIN 11851	DN100	435	17.1
ANSI 150# FLANGE	4"	525	20.7
ANSI 300# FLANGE	4"	525	20.7
DIN 16 BAR FLANGE	DN100	525	20.7

THIS DRAWING AND ALL IDEAS INCORPORATED IN ITS DESIGN IS THE EXCLUSIVE PROPERTY OF UNIBLOC-PUMP, LLC. ITS ACCEPTANCE CONSTITUTES AN AGREEMENT THAT IT SHALL BE TREATED AS A CONFIDENTIAL DOCUMENT USED FOR NO OTHER PURPOSE THAN TO AID IN ITS CONSTRUCTION, THAT IT IS TO BE RETURNED UPON REQUEST, AND THAT IT IS NOT TO BE DISCLOSED OR COPIED EXCEPT AS AUTHORIZED IN WRITING BY UNIBLOC-PUMP, LLC.

	BY	DATE
DRAWN	JH	00/00/00
CHECKED		
APP'D		
SCALE		

ALL DIMENSIONS IN MM [IN]

UNIBLOC® Hygienic Technologies

DWG. TITLE

GENERAL DIMENSIONS

SIZE	DWG. NO.	REV. NO.
PD600	D600	0

RELEASE DATE JAN. 0, 0000

SHEET 1 OF 2