STANDARD PUMP
A UNIBLOC® BRAND

Technical Specifications

Enclosure: ..... TEFC (IP54)
Washdown: ..... No
Voltage: 190/380//230/460
Horsepower (KW): ..... 0.75 (.56)
Phase: 3
Amps: 4.2/2.1//4/2
Frequency: ..... 50-60 Hz
Insulation Class: ..... F
Power Factor 49
Frame: D90LC
RPM: 750-900
Noise Level: ..... 70 dBa
Certification: ..... UL & CSA
Weight: ..... 56 lbs (25,5 kg)

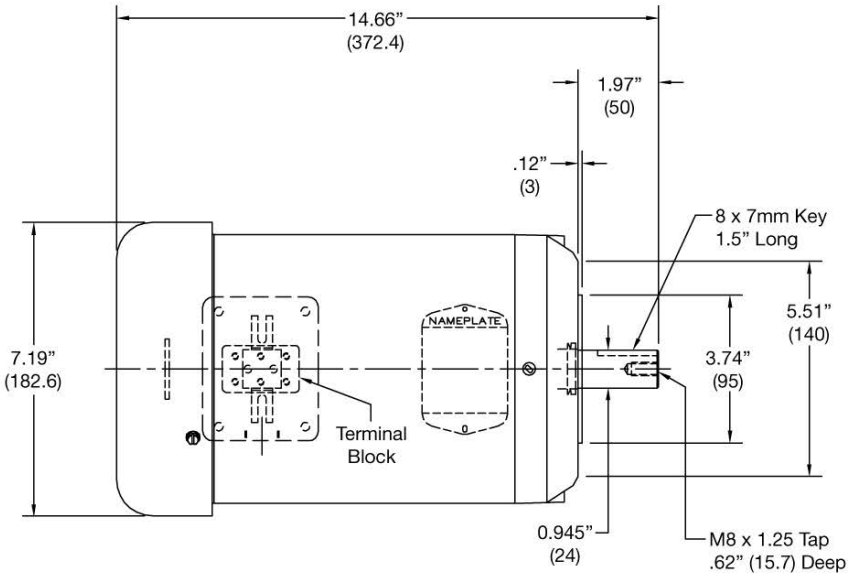

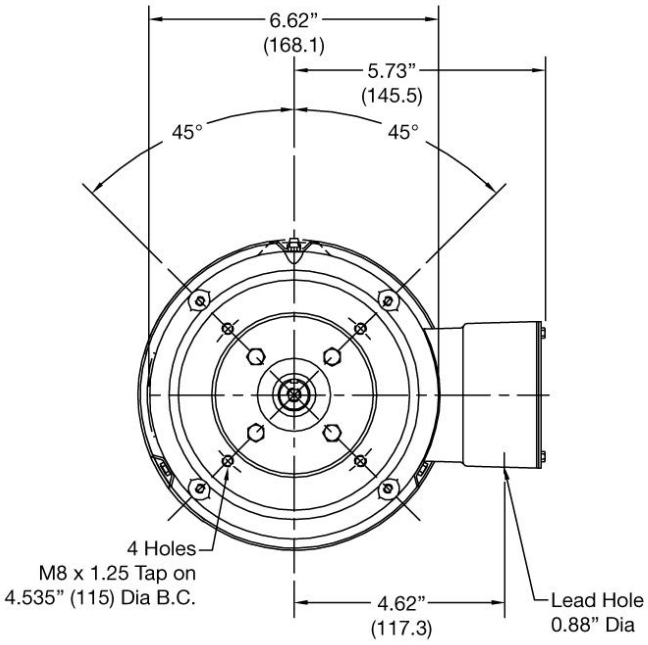

WARNING: Not suitable for pumping flammable or combustible liquids or use in a hazardous duty environment.

Note: Only compatible with the SP-700DD or 800DD Series pump.